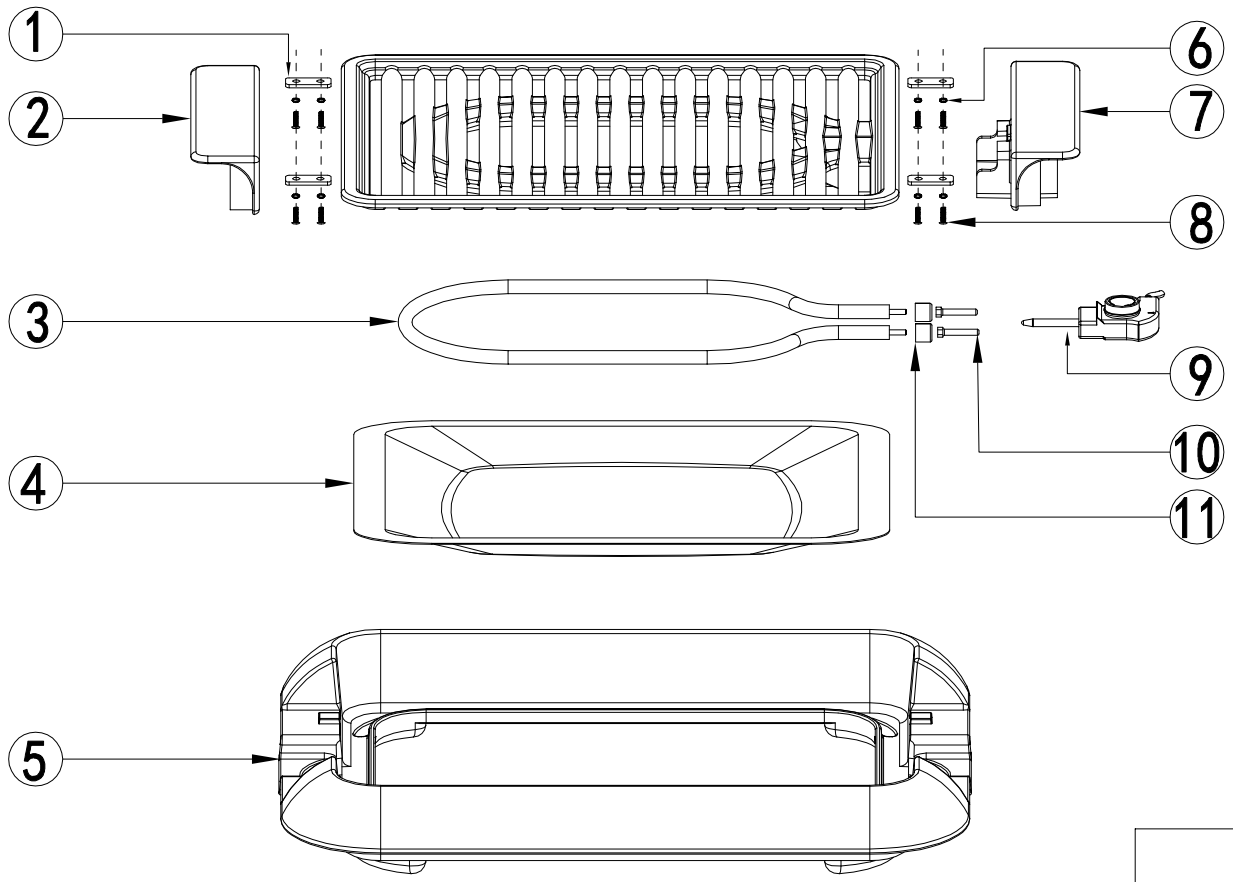

11	silica gel sheath	2
10	pin	2
9	thermostat	1
8	screw	8
7	right handle	1
6	screw	8
5	base	1
4	drip pan	1
3	heating element	1
2	left handle	1
1	handle connection stator	4
NO.	NAME	PCS