PRF071XW/PRF3X/PRF3XT

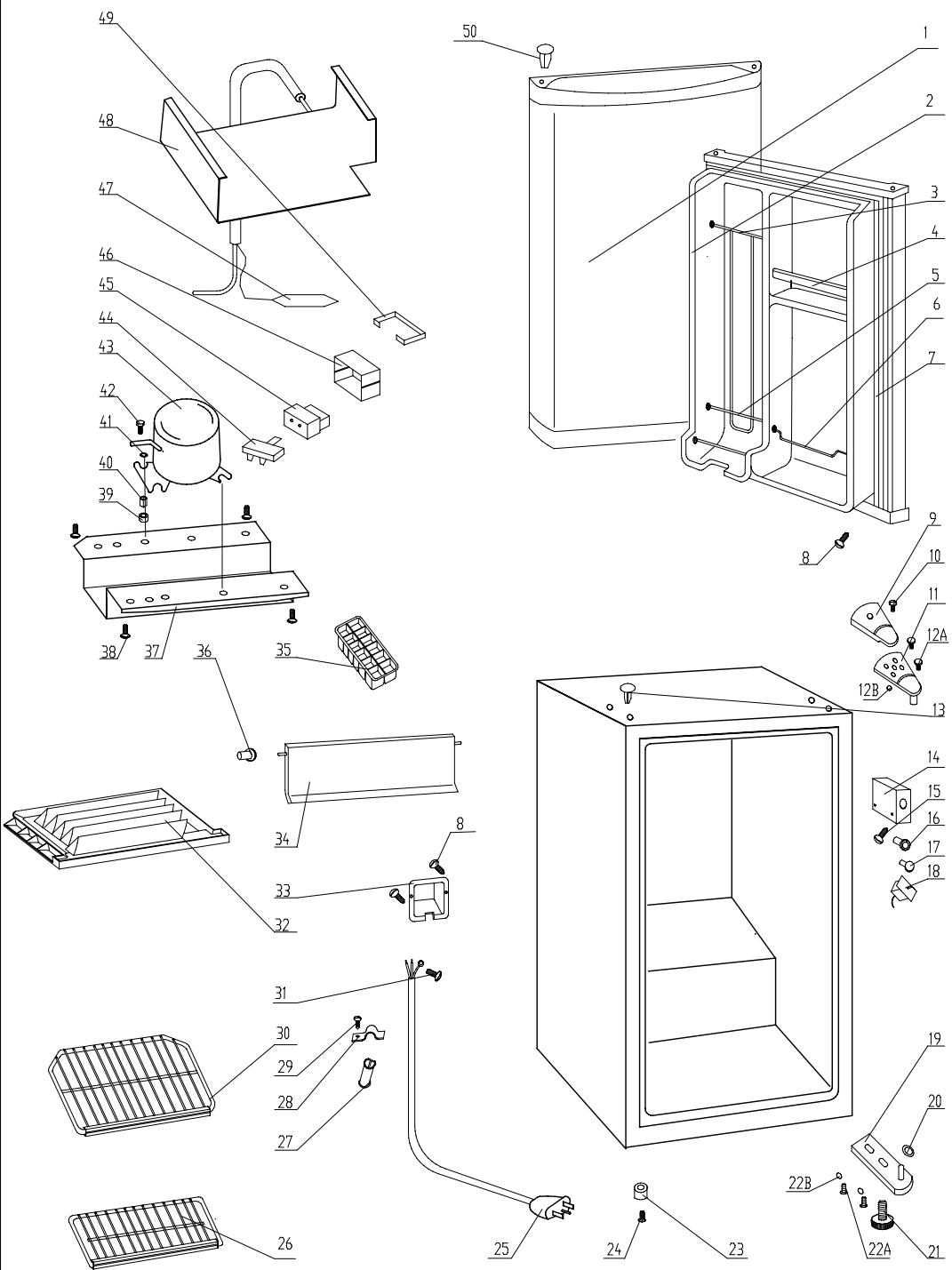

1			door	34		screw
2			door inner	35		ice box
3			T shelf	36		small door axes cover
4			middle balustrade	37		compressor support board
5			balustrade	38		screw
6			curve balustrade	39		rubber washer
7			gasket	40		pipe cover
8			screw	41		compressor washer
9			hinge cover	42		screw
10			screw	43		compressor
11			hinge board	44		heeter protector
12A			screw	45		PTC starter relay
12B			hinge washer	46		cover
13			pin	47		dryer
14			thermostat cover	48		evaporator
15			screw	49		spring cotter pin
16			thermostat knob	50		cover pin
17			thawing knob			
18			thermostat			
19			hinge			
20			door axes washer			
21			adjustable feet			
22A			screw			
22B			bottom hinge washer			
23			bottom feet			
24			screw			
25			power code			
26			small shelf			
27			wire clip			
28			fixing board			
29			screw			
30			large shelf			
31			grounding screw			
32			drop tray			
33			wire box			

PRF071XW/PRF3X/PRF3XT